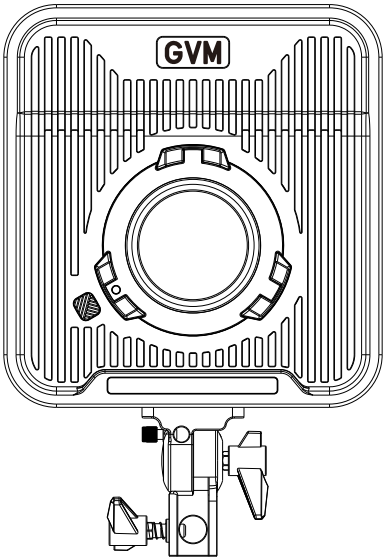

GVM

GVM FA500C AIO

V1

CONTENTS

Important Safety Instructions ---------- Page 1~2

Warning ---------- Page 2

Product Introduction ---------- Page 3

Disclaimers ---------- Page 3

Product Parameter ---------- Page 4

Product Structure Diagram ---------- Page 5

Installation Method ---------- Page 6~8

Description Of Product Control Keys ---------- Page 9

Function Introduction & Instructions For Use ---------- Page 10~13

NFC Function ---------- Page 14

APP Control ---------- Page 15~16

Quick Troubleshooting ---------- Page 17

Use And Maintenance ---------- Page 18

Precautions ---------- Page 18

Packing List ---------- Page 19

Product Warranty ---------- Page 20~21

IMPORTANT SAFETY INSTRUCTIONS

This product is professional lighting and staging equipment and should only be operated by a qualified lighting technician or used under the supervision of a professional. Always follow the precautions below to ensure safe and proper usage.

1. Read the product manual carefully before use.
2. This product is only suitable to use in a temperature range of -20℃ to 45℃.
3. Do not place the equipment near flammable and volatile solvents such as alcohol and gasoline.
4. Before storing the device, make sure it has cooled down completely. When being stored, unplug the power cord from the device. The equipment should be stored in its carrying case or a well-ventilated and dry place.
5. This lighting fixture is not for general illumination and should not be used as such. Individuals with eye injuries or sensitivity should avoid using this lighting fixture.
6. This is a professional light and children are prohibited from using it. Parents or guardians must closely supervise children when they are near the equipment to prevent personal injury caused by colliding with or misusing the equipment.
7. Before using the equipment, please remove the protective cover.
8. When the lighting fixture is on, it is forbidden to stare directly at the light source under any circumstances. High-intensity lighting should only be used under the guidance of a professional lighting technician. Avoid staying in a high-intensity light environment for a long time. If feeling any discomfort, please immediately turn off the lighting fixture, and seek medical attention.
9. When the lighting fixture is on, use it carefully and avoid contacting high-temperature components such as LED light sources to prevent being burnt.
10. Do not use damaged equipment or accessories. Wait for a professional repairman to inspect and repair it before it is confirmed that the equipment can function normally.
11. If the light source is damaged or deformed due to heat, please stop using it and contact the manufacturer, service agents, or qualified repairman promptly to replace the light source to avoid accidents.
12. If the product is cracked due to falling, squeezing, or strong impact during use, please stop using it to avoid to avoid electric shock by touching internal electronic components.
13. Do not disassemble the product by yourself. If the product malfunctions, it must be checked and repaired by the manufacturer or authorized repair personnel.
14. Before cleaning and maintenance, be sure to unplug the power supply. To unplug never pull on the cable but always pull the plug itself. This device shall only operate with earthed power outlets or emergency power generators.
15. When cleaning the device, do not wipe it with a wet cloth. Use a dry and soft cloth to wipe off the dirt.
16. If an extension cord is required, it needs to have the necessary capacity to power the respective unit. Using an extension cord with a lower current capacity than the devices need may cause overheating.

17. For some products with long power cords, please place the power cords properly and avoid contact with overheated surfaces that may damage or trip personnel. Please use the original power cords of our manufacturer. The damage caused by using non-original power cords is not covered by our repair service.
18. Do not use product accessories that are not recommended by our brand to avoid fire, electric shock, or personal injury.
19. Some products use batteries for power supply. Do not use any batteries, power sources, or accessories that are not specified in the user manual. Please keep batteries and other accessories out of reach of children and infants. If a child or infant swallows a battery or accessory, seek medical attention immediately. If the battery leaks, changes color, deforms, smokes, or emits an odor, remove it immediately. Be careful not to get burned during the removal. Continued use of such batteries may cause a fire, electric shock, or skin burns. Do not use any deformed or modified batteries. Do not disassemble or modify this product or the battery. Do not heat the battery or solder it. Do not let the battery come into contact with fire or water, or subject it to strong external force. Do not insert the battery's positive and negative ends incorrectly, or mix and use old and new batteries or different types of batteries.
20. For some products with built-in lithium batteries, please use a dedicated charger for charging, and following the correct operating instructions within the prescribed voltage and temperature range.
21. The warranty lasts for one year. Consumables like batteries, adapters, power cords, and other accessories are not covered by the warranty.
22. The one-year warranty will be invalidated if the equipment is found to have been repaired privately. The related repair costs will be charged.
23. Equipment malfunctions caused by non-standard operations are not covered by the warranty.
24. The safety instructions are based on our factory's strict testing. If there are any changes in the equipment's design and specifications, we reserve the right not to notify you. Customers can visit our official website to check the latest digital version of the instructions and learn about the newest product information.

Keep these instructions!

⚠ WARNING:

- ⚠ High-power LED lights are strictly prohibited from being directly viewed or shining into other people's eyes.
- ⚠ Do not unplug the power cord or connecting wires while the light is on to avoid personal injury.
- ⚠ Do not cover the heat dissipation port when the lamp is in operation.
- ⚠ Keep children away from touching or using this light.
- ⚠ As professional lighting equipment, please make sure to operate it correctly according to the user manual.

PRODUCT INTRODUCTION

Thank you for purchasing the "GVM FA500C AIO". This product is specifically designed for lighting technicians and photography / videography professionals. This product is suitable for use in live streaming, outdoor, studio, and YouTube productions and YouTube productions.

The main features of the product are:

1. The light features step-less dimming and is equipped with a single Bi-color COB LED light engine that is rated at CRI & TLCI 97+. It is capable of producing bi-color temperature range of 2000 K to 10000 K and can greatly enhance contrast in scenes, with realistic and vibrant illumination.
2. Connect and control through your iOS and Android smart mobile devices; Supports Bluetooth Mesh networking and can be used for group control with other GVM brand devices that support Mesh networking.
3. 6 lighting modes: CCT, HSI, RGB, GEL, Source Matching, and FX.
   - CCT Mode: Adjust the light's intensity and color temperature as needed.
   - HSI Mode: Sets the color of the light by adjusting hue, saturation, and brightness.
   - RGB Mode: Sets the color of the light by adjusting red, green, and blue values.
   - GEL Mode: Simulates the color of traditional colored gels, offering two types of CP-L and CP-R colored gels, each with 30 gel options.
   - Source Matching Mode: The light Source Matching mode can only be used when controlled by the APP. Choose from 12 simulated light sources: Tungsten, HMI5600, HMI6000, Studio Lamps, Sodium Lamp, Halogen, Arc Lamp, Candle, Sunset/Sunrise, Daylight, Overcast Sky, CFL Cool White.
   - FX Mode: The light FX mode can only be used when controlled by the APP. Choose from 16 simulated light effects: Lightning, CCT Loop, Candle, Bad Bulb, TV, Paparazzi, Explosion, Pulsing, Disco, Cop Car, Party, Hue Loop, Fireworks, Fire Engine, Ambulance SOS.

We firmly believe that proper use of this product will greatly enhance your production workflow. We strongly recommend reading the following user guide carefully before using the product.

DISCLAIMERS

1. Before using this product, please read the text carefully to ensure that the correct operation of the product has been carried out. Failure to follow and not following the instructions and warnings in this document may cause harm to you and others around you, or even damage the product or other surrounding items.
2. By using this product, you are deemed to have carefully read the disclaimer and warning, understand and acknowledge all the terms and contents of this statement, and promise to take full responsibility for the use of this product and the possible consequences.
3. Design and specifications are subject to change without notice.

PRODUCT PARAMETER

- Brand : GVM
- Product Model : GVM FA500C AIO
- Product Name : LED Video Light
- Product Type : LED COB Light
- Features : Flat profile compact design, High CRI COB LED Chip
- Control Methods : On board control, App Control via Bluetooth Mesh Networking
- Bluetooth Controllable Distance : ≤50M
- Light Adjustment Method : Step-less adjustment
- Color Rendering Index : ≥97
- Color Temperature : 2000K~10000K
- Illuminance : 19000 lux@1m; 2160 lux@3m
- LED Chip Quantity : 1 (COB light Chip)
- Power : 500W
- Product Net Weight : 3.7kg
- Product Size (mm) : 126×230×336
- Power Supply Method : AC Input
- Voltage : AC 100V~240V
- Cooling : Heat Sink Radiating + Cooling Fan
- Product Material : Aluminum alloy + Plastic
- Commodity Origin : Huizhou. China

PRODUCT STRUCTURE DIAGRAM

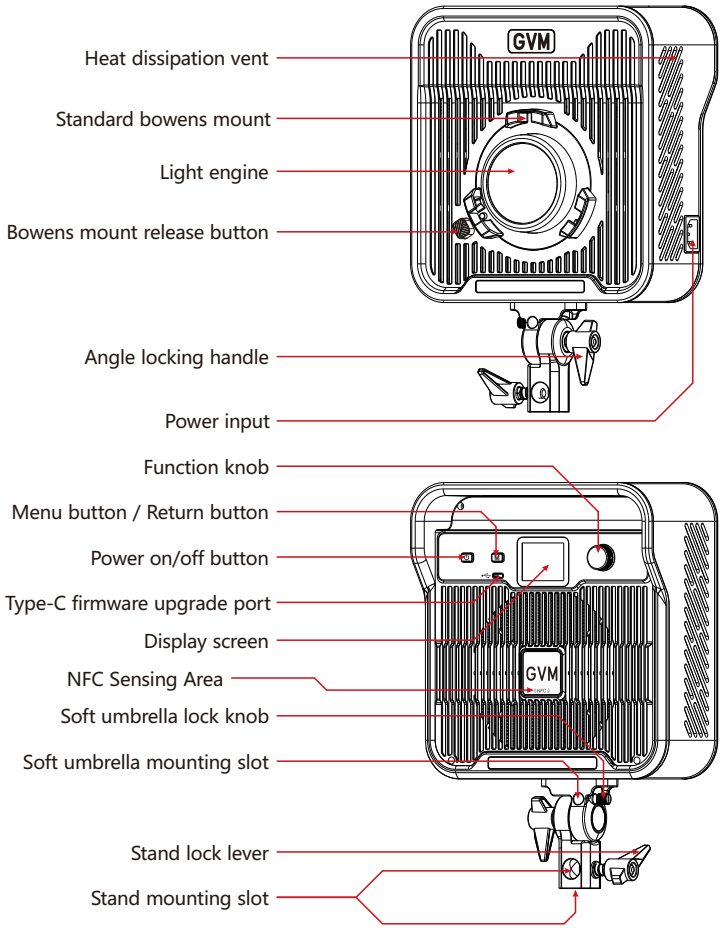

INSTALLATION METHOD

❶ Detaching and attaching the protective cover

Detaching:

Press and hold the Bowens Mount Release Button then rotate the protective cover counterclockwise to remove it from the light.

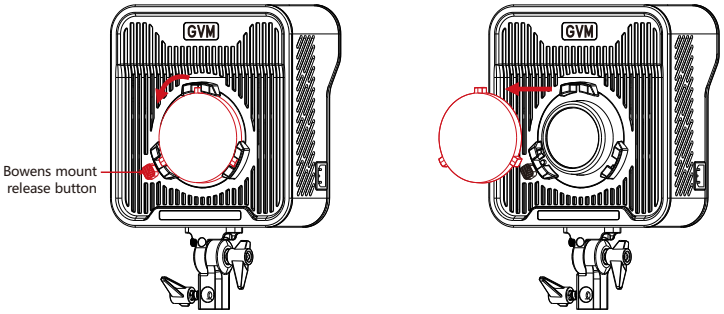

Attaching:

Align the three prongs on the protective cover with the corresponding sockets of the light → Insert and gently turn it clockwise to securely attach it to the light.

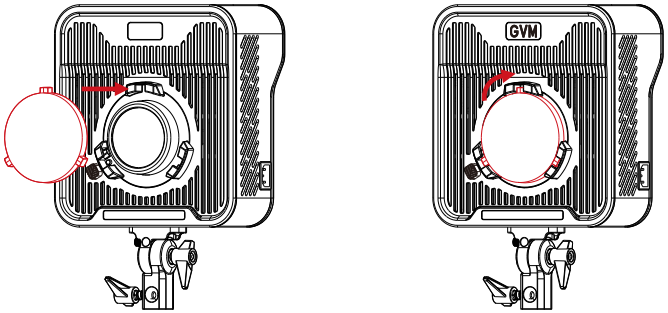

❷ Installation of the Swivel Light Stand Mount

Loosen the knob on the swivel light stand mount, slide the end of the quick release track pin into the swivel light stand mount, and then tighten the knob to secure it in place.

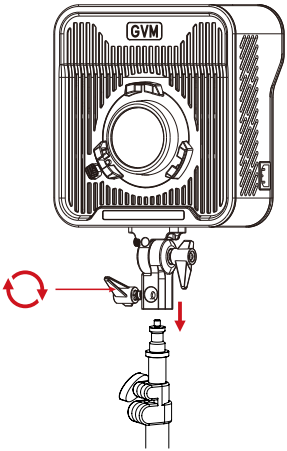

❸ Angle adjustment

Loosen the handle on the swivel light stand mount to adjust the light to the desired position, then tighten to lock.

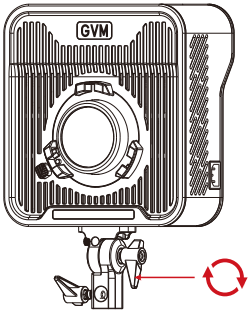

4 Connect the power cord for power supply.

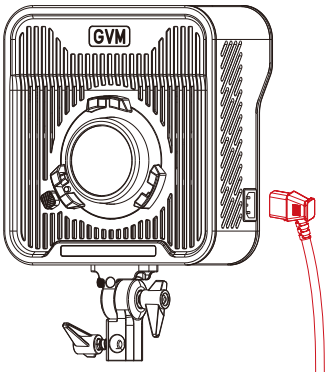

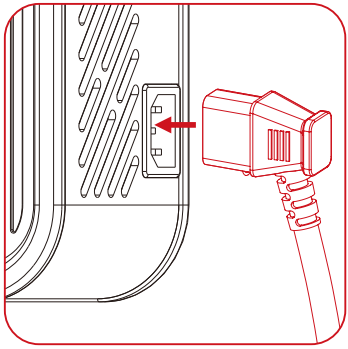

AC Input

DESCRIPTION OF PRODUCT CONTROL KEYS

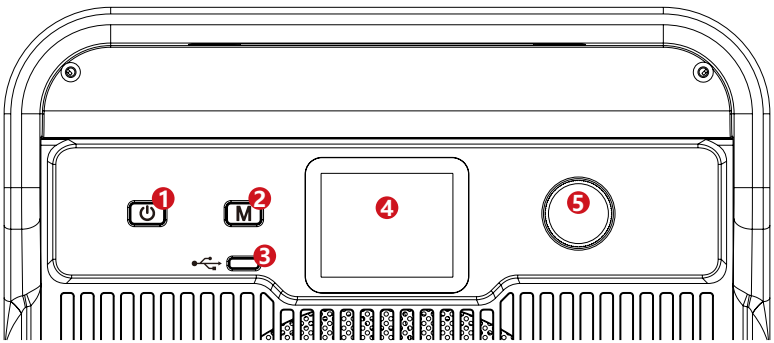

1 ON/OFF switch: Turn on or off the light.

2 Menu button / Return button:
【Long press】Enter the system menu interface.
【Short Press】Return to the previous level menu.

3 USB TYPE-C port: Support firmware update.
(Does not support power pass through to the product or charging of mobile phones and other digital products externally.)

4 Display: Displays the current settings, modes, and parameters.

5 Knob:
【Rotate】Select a menu and adjust parameters.
【Click】Go to the menu or confirm the selection.

FUNCTION INTRODUCTION & INSTRUCTIONS FOR USE

① STATUS INDICATION

	Fan mode: Smart		Dimming curve: Linear
	Fan mode: High		Dimming curve: Exp
	Fan mode: Silent		Dimming curve: Log
	Bluetooth connected		Dimming curve: S

② MENU

Long press the [M] key to enter the system menu Settings → Rotate the [knob] to select the menu → Press the [knob] to enter the selected menu → Short press the [M] key to return to the previous level menu.

Fan Setting

Rotate the [knob] to select [Smart/High/Silent] → Press the [knob] to confirm the selection.

Smart: Adjust the fan speed in response to temperature changes.

High: The fan operates at its maximum speed.

Silent: The silent mode will stop the fan from rotating and reduce the light output power to 50W. This mode is not recommended for long-term use.

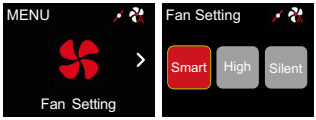

Curve

Rotate the [knob] to select the type of dimming curve [linear/logarithmic/exponential/S-type] → Press the [knob] to confirm the selection.

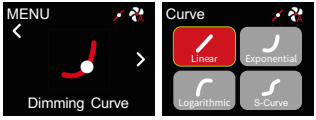

Frequency

Rotate the [knob] to set the parameters → Press the [knob] to confirm the parameters.

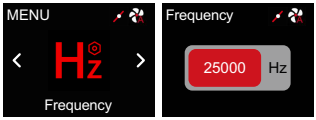

Bluetooth

Rotate the [knob] to select [BT State/BT Reset].

BT status: Press the [knob] to turn on/off Bluetooth.

BT Reset: Press the [knob] to confirm the selection and then you can reset the Bluetooth.

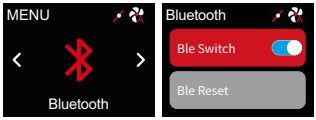

Studio Mode

Rotate the [knob] to select [ON/OFF] → Press the [knob] to confirm the selection.

Activate the Studio Mode. In the power-off state, the device will automatically power on upon being powered on. Deactivate the Studio Mode. In the power-off state, the device needs to be manually powered on after being powered on.

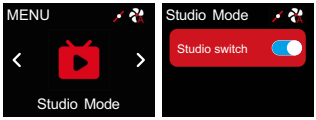

Language

Rotate the [knob] to select the language type [English/ 中文] → Press the [knob] to confirm the selection.



Run Status

Check the current values of [Lamp Temp], [Pwr Fan Spd], and [Lmp Fan Spd] of the product.

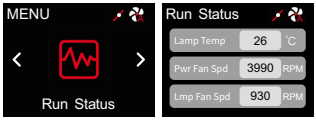

Product Info

Check the current values of [Hardware Version] and [Firmware Version] of the product.

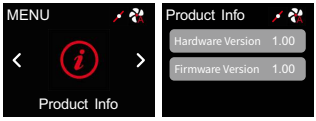

Upgrade

Download the upgrade file from the official website to the root directory of the USB drive → Connect the USB drive with the upgrade firmware to the light → Press the [knob] to confirm [Start Upgrade]. This procedure can be used to upgrade the operating firmware version of this product.
(Supported USB flash drive format: FAT32)

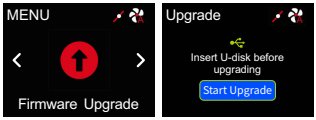

System Reset

Rotate [knob] select the [Yes/No] → Press [knob] to confirm the selection.



③ LIGHT

There are a total of 5 lighting modes: CCT, HSI, RGB, GEL, Source.
Rotate the [knob] to select the lighting mode → Press the [knob] to confirm the selection → Rotate the [knob] to set the parameters → Press the [knob] to confirm the parameters → Press the [M] key to return to the previous menu.

● CCT

It can adjust brightness and color temperature, the color temperature of the lighting can be adjusted from 2000K to 10000K.
INT: The brightness parameter of the lighting.
CCT: The color temperature parameter of the lighting.
G/M: The green/magenta offset parameter of the lighting.



● HSI

It can adjust hue, saturation and intensity. It supports 36 million adjustable light colors.
INT: The intensity parameter of the lighting.
HUE: The hue parameter of the lighting.
SAT: The saturation parameter of the lighting.

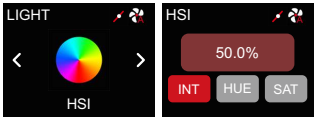

• RGB

Light color is configured by regulating red, green and blue light, with 16 million selectable colors available.

INT: The brightness parameter of the lighting.

R: The red light parameter of the lighting.

G: The green light parameter of the lighting.

B: The blue light parameter of the lighting.

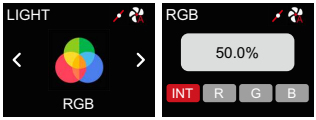

• GEL

The light can simulate the colors of color filters. It supports two types: CP-L and CP-R, with 30 color options for each type.

INT: The brightness parameter of the lighting.

CP-L/CP-R: Choose the type of color filter.

GEL: Choose filter color.

3200K/5600K: Choose lighting color temperature.



• SOURCE

Choose from 12 simulated light sources: Tungsten, HMI5600, HMI6000, Studio Lamps, Sodium Lamp, Halogen, Arc Lamp, Candle, Sunset/Sunrise, Daylight, Overcast Sky, CFL Cool White.

INT: The brightness parameter of the lighting.

Source: Choose the type of light source.



④ FX Mode

The FX mode can only be accessed through the APP.

Choose from 16 simulated light effects: Lightning, CCT Loop, Candle, Bad Bulb, TV, Paparazzi, Explosion, Pulsing, Disco, Cop Car, Party, Hue Loop, Fireworks, Fire Engine, Ambulance SOS.

NFC FUNCTION

This device has a built-in NFC sensing module. When an NFC-enabled smart device is brought close to the NFC sensing area marked on the device, it will perform one of the following actions: redirect to the APP download webpage, or automatically launch the APP for Bluetooth connection.

Operating Steps:

1. Locate the position printed with the 《NFC》 icon on the device housing.
2. Turn on the NFC switch on your smart device, then place the NFC sensing area of your smart phone close to the 《NFC》 icon on this device.
3. Wait for the device to be recognized. After successful identification:

- If the matching APP is already installed:
  Automatically launch the APP and search to connect to the device via Bluetooth.
  (Before using NFC pairing, please reset the device's Bluetooth connection first. Some Android devices do not support automatic app wake-up. You need to manually open the APP, enter the Add Device via NFC menu to complete recognition and connection.)
- If the matching APP is NOT installed:
  You will be automatically redirected to the APP download webpage to download and install the APP.

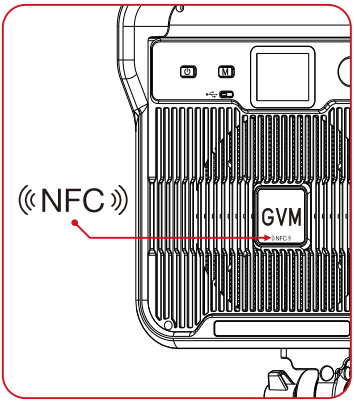

NFC Sensing Area

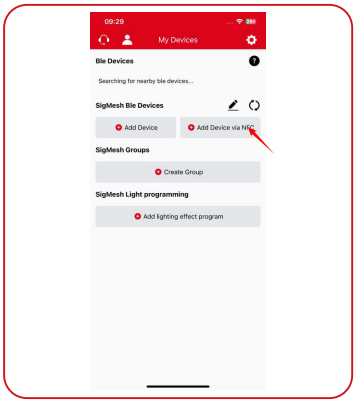

Add Device via NFC

APP CONTROL

APP Download Method

(Scan the QR code on the back of the manual to download the APP)

Android Device：Official website QR code, Google Play, Huawei Store, etc.

iOS Device：App Store

Device Adding

1. Before adding a device, please make sure you have turned on your phone's Bluetooth and network data, granted the app access to Bluetooth and network data, then reset the lighting device's Bluetooth.
2. Click the "Add Device" button on the "My Devices" page to find the Bluetooth light devices that have been turned on nearby. (Figure 1)
3. Select the device to be connected for pairing. (Figure 2)

* Android requires location permissions to be turned on in order to connect your device using mesh technology, and we do not collect any of your location information during this process.

Figure 1

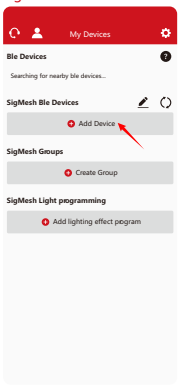

Figure 2

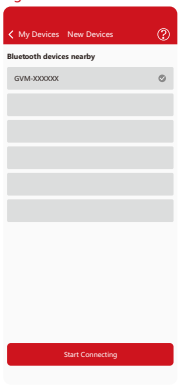

Device Management

1. After successfully adding your lighting device, your device will be displayed in the "My Devices" list. (Figure 3)
2. Click on the Device to access the device control. (Figure 4)

Figure 3

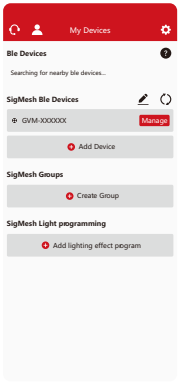

Figure 4

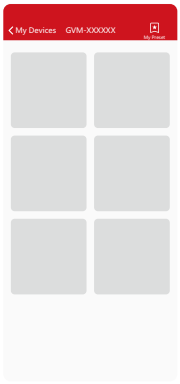

Account Login

- Use e-mail to get the verification code to log in (the first login automatically registers the account). (Figure 5)
- There may be a delay in sending the verification code, and the speed of delivery depends on the e-mail server you are using.
- Some email servers may recognize our verification emails as advertising promotions, please check your spam folder/inbox.
- After logging in, you can synchronize the Mesh Bluetooth devices bound to the current account to other smart devices.

Figure 5

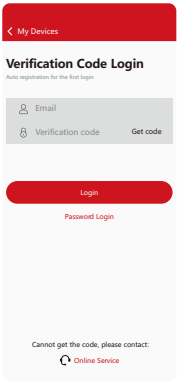

QUICK TROUBLESHOOTING

Issue	Check the product	Troubleshooting
The indicator does not light up.	Whether the connection between the light and the power supply is normal.	Make sure the power cord is securely connected.
While using the APP to add a device, the Bluetooth of the device cannot be found.	Check if the device is turned on properly and that it is not already paired by paired with another user/device..	Follow these steps: 1. Turn on phone's Bluetooth and network data function, android devices need to turn on the GPS positioning. 2. Allow access to Bluetooth and network data, GPS positioning. 3. Reset the device Bluetooth according to the user manual.
The APP failed to pair to a device.	Check if the device is turned on properly and has not been connected or paired by others; Check if the Bluetooth and network conditions of the cell phone are good.	Reset the device Bluetooth and restart the app then try to connect again.
The device is no longer searchable after removing it from the APP.	Check if the device have been removed while it is offlined or in poor network conditions.	Reset the device Bluetooth and then search again to add the device.
In-app device cannot cannot be accessed.	Check if the device is online; If it's offline, follow the steps for pairing/network connection failure.	Reboot the device, wait for 5 seconds, wait till it shows as online status. To control it; Reset the device Bluetooth and then add the device back to the device list.

USE AND MAINTENANCE

Do not place the product in a high humidity, strong electromagnetic field, direct sunlight, or high-temperature environment. If the product will not be used for a long time, please disconnect its power.

Cleaning: Unplug the power before cleaning. Use a dry cloth only—avoid cleaning agents or solvent-based liquids, as they may damage the surface.

Power: Make sure the power is within the demanded range, not too high or too low.

Repairing: If there is a fault or performance degradation, do not unpack the shell by yourself, avoiding damage to the machine and losing the right of maintenance. When there is a fault, do not hesitate to contact us, and we will do our best to deal with the problem.

Accessories: Please use the accessories provided by the manufacturer and approved ones, to maximize the performance.

Warranty: Do not modify the product, or you will lose the right to maintenance.

PRECAUTIONS

1. Please use the matching AC Input / AC Power Cord the same specification to power the product. Do not use power adapter with different output voltage parameters.
2. The product is not anti-corrosion, therefore do not let the product touch any corrosive liquid.
3. When using the product, make sure the product is put firmly and prevents falling and damage.
4. If the product will not be used for a long time, please switch off the power to reduce energy loss.

PACKING LIST

Name	Quantity	Notes
LED Video Light	1	
Light Head Protective Cover	1	
AC Power Cord	1	
Carrying Bag	1	

PRODUCT WARRANTY

Dear user, this warranty card is important proof for applying for warranty service. Please cooperate with the salesperson to fill it out and keep it properly. Thank you!

Product Information	Model Number	Product Barcode
User Information	Name	Contact Number
	Mailing Address	
Seller Information	Name	
	Contact Number	
	Mailing Address	
	Sales Date	
Remarks		

Note: this form should be confirmed by the salesperson's stamp.

Applicable Products

This document applies to the products listed in the relevant "Product Warranty Information" (see instructions below). Other products or components that do not fall within this scope (such as promotional products, gift items, and other components added after the factory) are not covered by this warranty promise.

Warranty Period

The corresponding warranty period for products and components shall be executed according to the relevant "Product Warranty Information". The warranty period starts from the first day of purchase of the product, and the date of registration on the warranty card at the time of purchase shall prevail.

How to Obtain Warranty Service

You can directly contact the product salesperson or authorized service agency, or call GVM's after-sales service hotline to contact us and have our service personnel arrange service for you. When applying for warranty service, you should provide a valid warranty card as a warranty certificate to be eligible for warranty service. If you cannot provide a valid warranty card, we may also provide you with warranty service under the circumstance that our products or components are confirmed to be within the warranty scope, but this is not our obligation.

Cases where warranty does not apply:

If the product meets the following conditions, the warranty and service under this document will not apply:

1. The product or parts have exceeded the corresponding warranty period.
2. Malfunctions or damages caused by incorrect or improper use, maintenance, or storage, such as improper handling, use for purposes other than the reasonable expectations of the product, incorrect insertion or removal of external devices, falling or crushing due to external force, or exposure to inappropriate temperature, solvents, acids, alkalis, water immersion, or damp environments.
3. Malfunctions or damages caused by unauthorized installation, repair, modification, addition, or disassembly by institutions or personnel not authorized by GVM.
4. Modifications, changes, or removals of the original identification information of the product or its parts.
5. Lack of valid warranty card.
6. Malfunctions or damages caused by the use of unauthorized, non-standard or non-publicly released software.
7. Malfunctions or damages caused by force majeure or accidents.
8. Other malfunctions or damages not caused by quality issues of the product itself. In such cases, you should seek solutions from the relevant responsible parties, and GVM will not be held liable. Malfunctions or damages caused by components, accessories, or software not covered by the warranty or beyond the warranty scope that renders the product unable to function properly are not covered by the warranty. Fading, wear, and consumption that is normal during the product usage process are not covered by the warranty.

Product Warranty and Service Support Information

The product warranty period and service types are implemented according to the following "Product Warranty Information" for each product category, component, and optional equipment:

Product Category	Accessories Name	Warranty Period(Month)	Warranty Service Type
Component	Circuit Board.	12 Months	Customer service repair
Other	Spotlight mount, softbox, adapter, Standard reflector, power cord, battery handle, light stand, TYPE-C cable, battery slot, battery, Fresnel lens, grid, carrying bag and all other accessories, etc. Consumable or electrically sensitive parts are not covered by the warranty.	None	No Warranty

QC
PASS

GVM Official website

Facebook

Download APP

Huizhou Latu Film Equipment Co., Ltd.
Web: www.gvmled.com
B&H Email: bh@gvmled.com
GVM Email: support@gvmled.com
Amazon Email: amazonsupport@gvmled.com
Warehouse Address: 12285 MCNULTY RD, STE 105 PHILADELPHIA, Pennsylvania 19154, USA